PLAN " A1 - A5" DETAIL

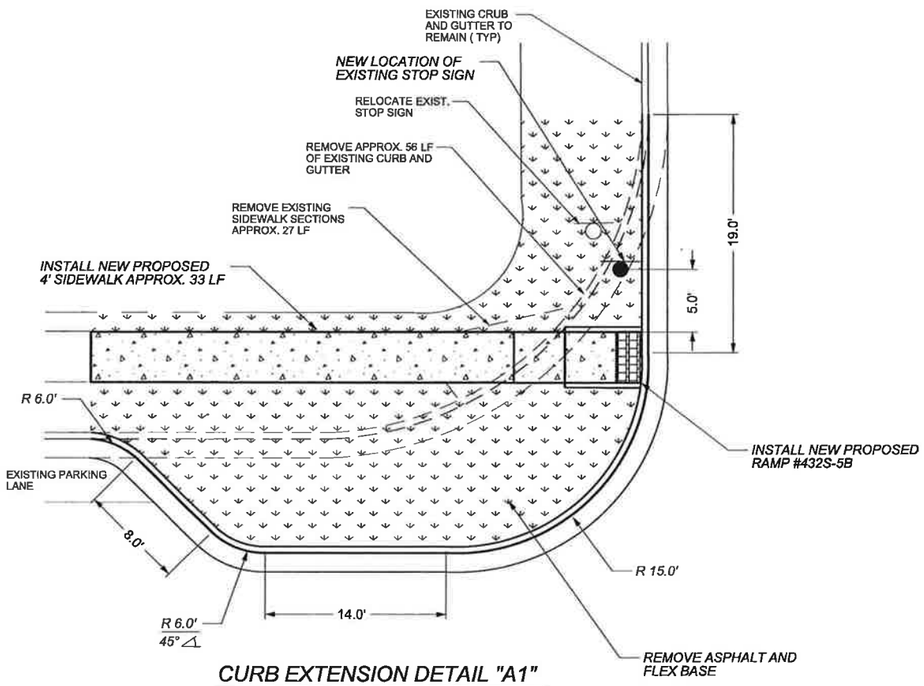

CURB EXTENSION DETAIL "A1"
N.T.S.

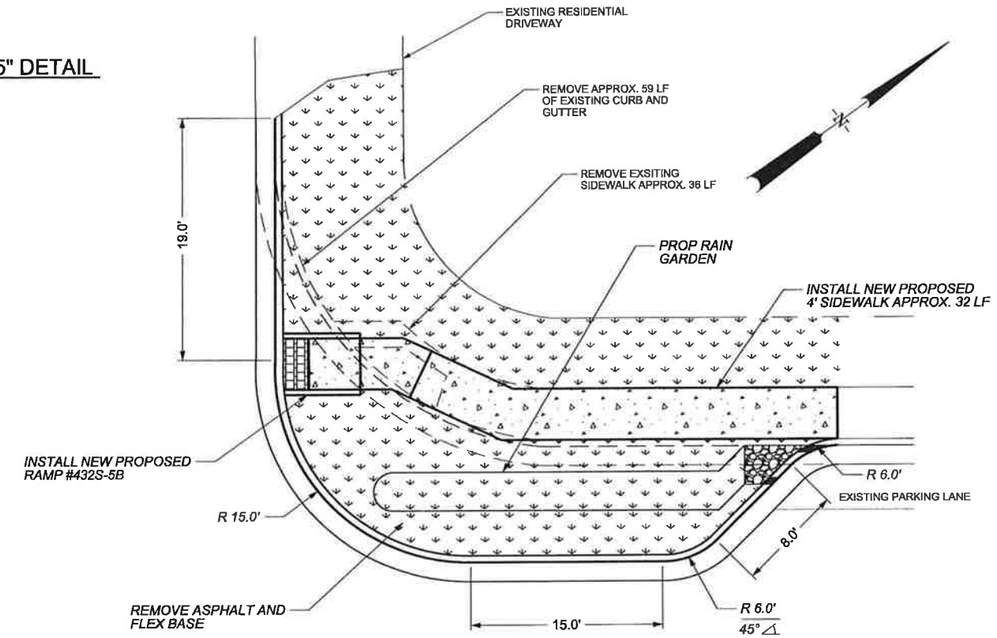

CURB EXTENSION DETAIL "A2"
N.T.S.

BOXDALE DRIVE

ROCKWOOD LANE

MOUNTABLE CURB EXTENSION DETAIL "A3"
N.T.S.

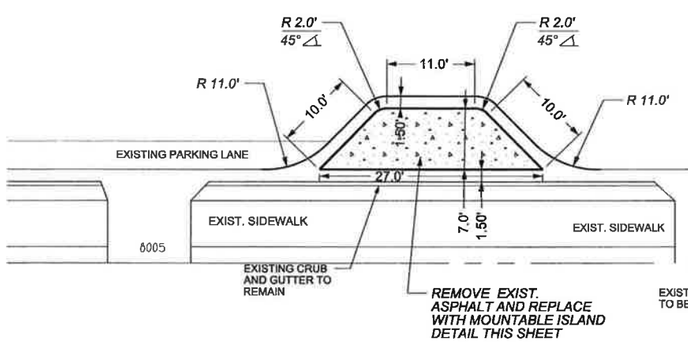

CURB EXTENSION DETAIL "A4"
N.T.S.

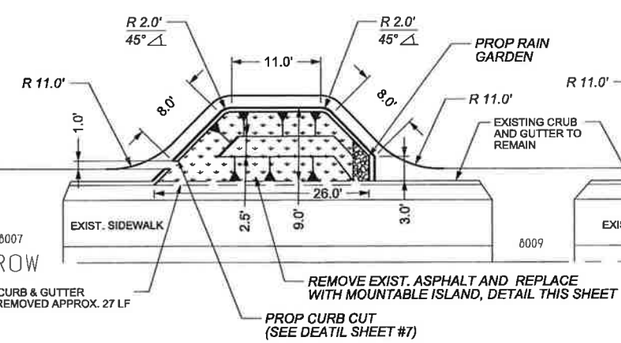

MOUNTABLE CURB EXTENSION DETAIL "A5"
N.T.S.

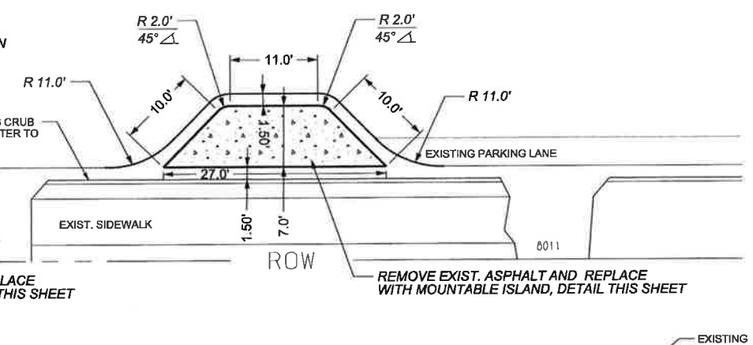

LEGEND

- EXISTING CURB & GUTTER
- PROPOSED MOUNTABLE CURB EXTENSION
- PROP. BULB OUT RAIN GARDEN

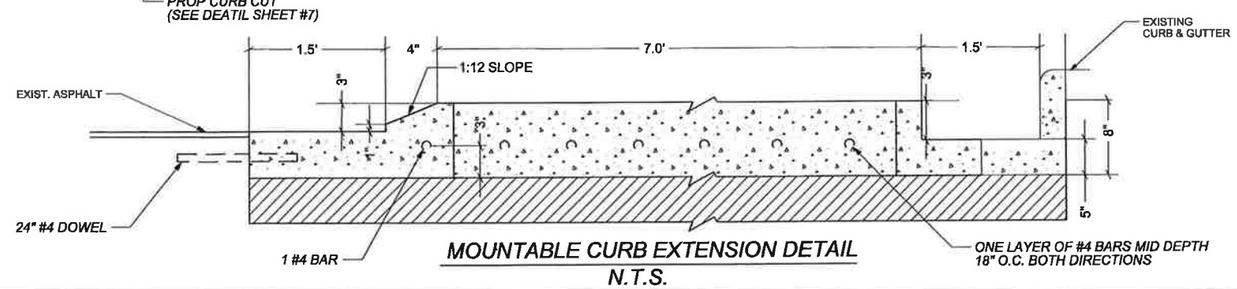

MOUNTABLE CURB EXTENSION DETAIL
N.T.S.

REV NO.	BY	DATE	REVISION DESCRIPTION

STATE OF TEXAS
ADEWALE K. ODUFUYE, P.E.
91302
LICENSED PROFESSIONAL ENGINEER
9/17/14
THE SEAL APPEARING ON THIS DOCUMENT WAS AUTHORIZED BY ADEWALE K.ODUFUYE,P.E.,LIC.# 91302

CITY OF AUSTIN, TEXAS
DEPARTMENT OF PUBLIC WORKS
ENGINEERING SERVICES DIVISION

LOCAL AREA TRAFFIC MANAGEMENT
ROCKWOOD LANE

ROCKWOOD LANE DETAIL PLAN "A1 - A5"

ENGINEERING CITY OF AUSTIN FOUNDED 1839 DESIGN

NOTES	NAME	DATE
SURVEY BY	COA	3/13
DRAWN BY	JB	3/13
CHECKED BY	DL/AD	3/13
DESIGNED BY	JB	3/13
REVIEWED BY		

ENGINEERING SERVICES DIVISION

PERMIT NUMBER

SHEET NUMBER 8 OF 26

PLAN " A6 - A10" DETAIL

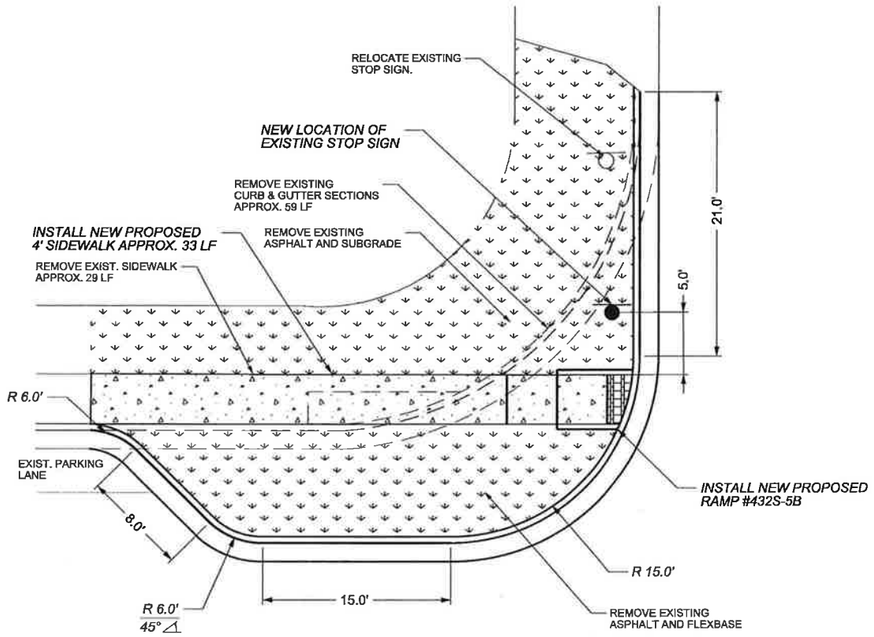

CURB EXTENSION DETAIL "A6"
N.T.S.

FIRWOOD DRIVE

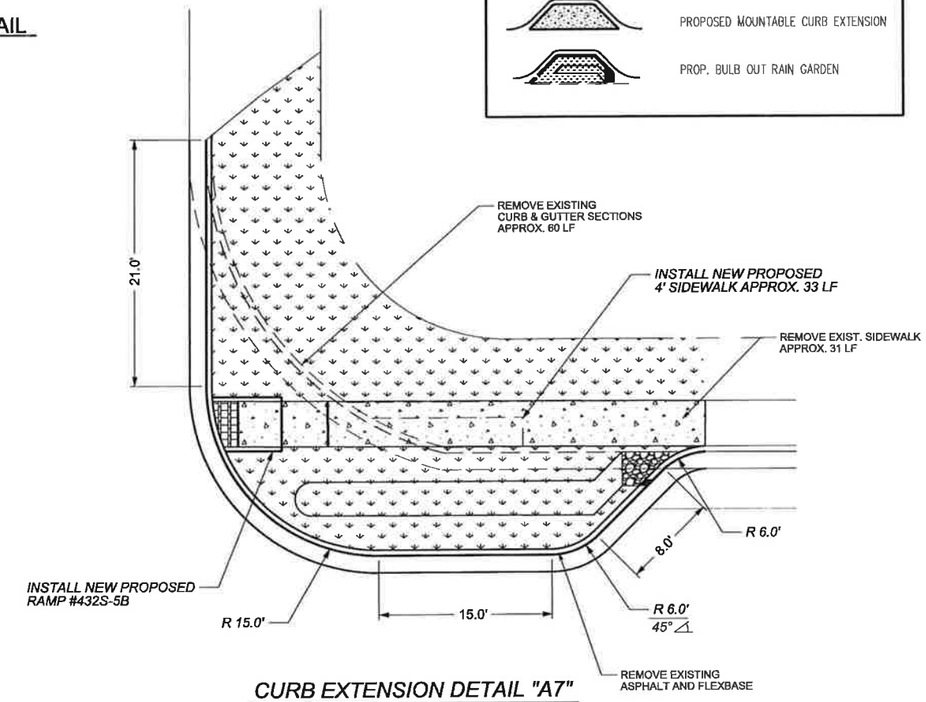

CURB EXTENSION DETAIL "A7"
N.T.S.

ROCKWOOD LANE

MOUNTABLE CURB EXTENSION DETAIL "A8"
N.T.S.

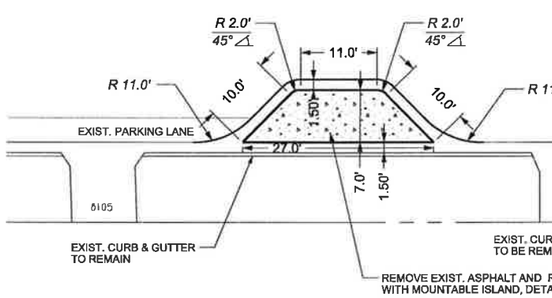

CURB EXTENSION DETAIL "A9"
N.T.S.

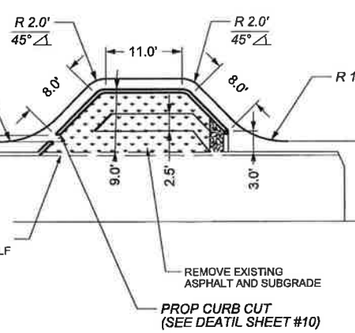

MOUNTABLE CURB EXTENSION DETAIL "A10"
N.T.S.

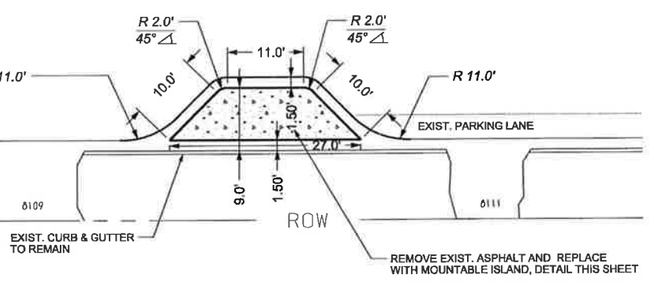

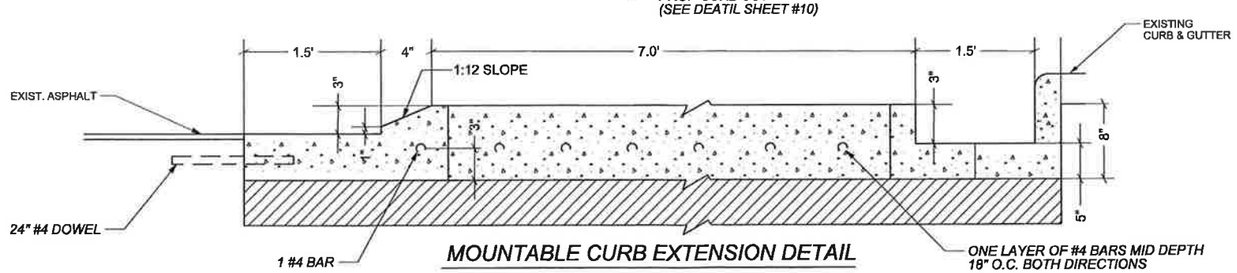

MOUNTABLE CURB EXTENSION DETAIL
N.T.S.

REV. NO.	BY	DATE	REVISION DESCRIPTION

STATE OF TEXAS
ADEWALE K. ODUFUYE, P.E.
91302
LICENSED PROFESSIONAL ENGINEER
8/17/18
THE SEAL APPEARING ON THIS DOCUMENT WAS AUTHORIZED BY ADEWALE K.ODUFUYE,P.E., LIC.# 91302

CITY OF AUSTIN, TEXAS
DEPARTMENT OF PUBLIC WORKS
ENGINEERING SERVICES DIVISION

LOCAL AREA TRAFFIC MANAGEMENT
ROCKWOOD LANE

ROCKWOOD LANE PLAN DETAIL "A6 - A10"

ENGINEERING CITY OF AUSTIN FOUNDED 1839 DESIGN

NOTES	NAME	DATE
SURVEY BY	COA	3/13
DRAWN BY	JB	3/13
CHECKED BY	DL/AO	3/13
DESIGNED BY	JB	3/13
REVIEWED BY		

ENGINEERING SERVICES DIVISION

PERMIT NUMBER
____-____-____

SHEET NUMBER 11 OF 26